# Embedded System HW Design
# Week7
# PCB Design Foundations & Hardware Integration

- PCB stackups, routing rules, decoupling
- Power integrity and grounding techniques
- High-speed design considerations
- Understanding eval board PCBs using STM32 kit as reference

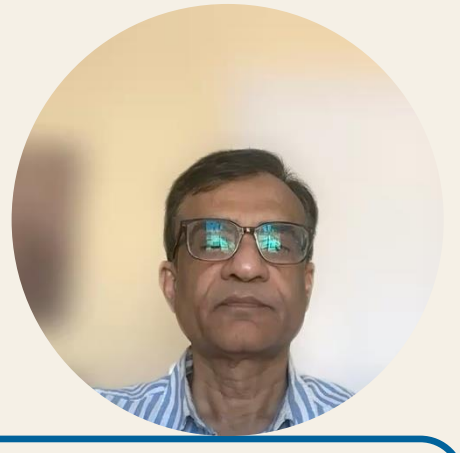

Template designed by Tim Palmer: tpalmer@vsu.edu

# Embedded System HW Design
# Week7
# Why PCB Design Matters

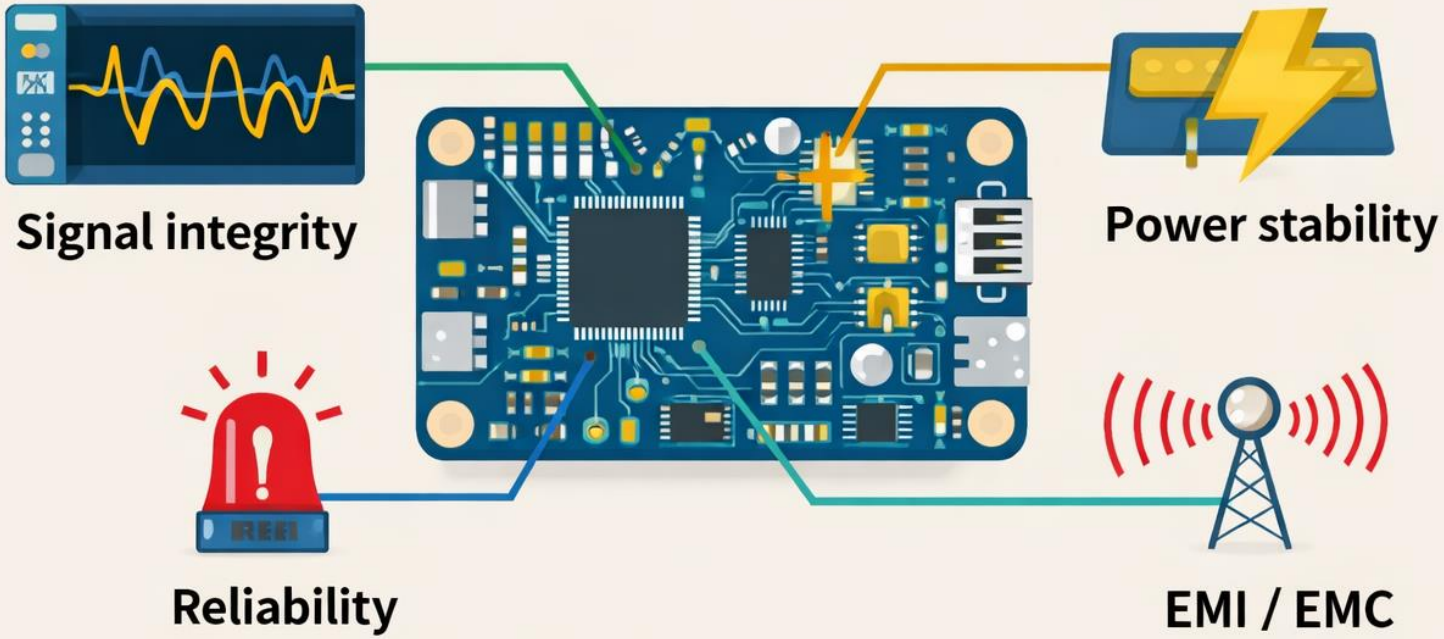


PCB layout directly affects:
- Signal integrity
- Power stability
- EMI / EMC

- Many "firmware bugs" are actually hardware layout issues
- Eval boards show *industry-quality reference designs*

Template designed by Tim Palmer (palmer@ucsd.edu)

# Embedded System HW Design
## Week7
## PCB Stackups

**PCB stackup defines:**

- Number of layers
- Copper thickness
- Dielectric materials
- Ground and powe plane placement

**Common embedded stackups:**

- 2-layer (low cost, limited performance)
- 4-layer (most common for STM32 designs)
- 6+ layers (high-speed or dense systems)

2-layer

4-layer

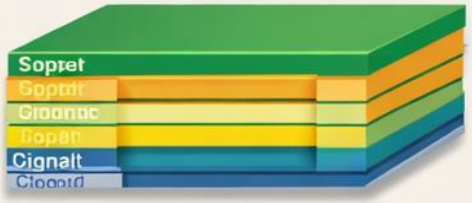


Copper
Dielectric

6-layer

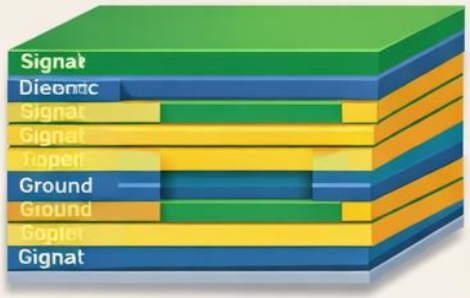


Copper
Dielectric
Ground
Power

Template designed by Tim Balmus

# Embedded System HW Design
# Week7
# Typical 4-Layer Stackup

**Example**:

- Top Layer — Signals + Components
- Inner Layer 1 — Solid Ground Plane
- Inner Layer 2 — Power Plane or Signals
- Bottom Layer — Signals

**Key rule**:

- Keep **continuous ground plane directly under signal layer**

**Benefits**:

- Low return path impedance
- Better EMI
- Cleaner signals

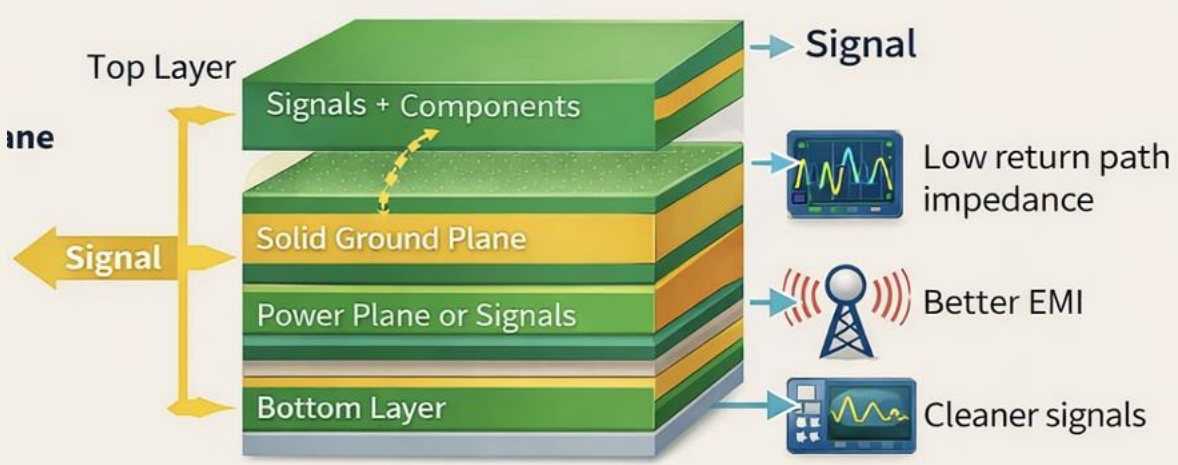


Template designed by Tim Palmer tpalmer@vsu.edu

# Embedded System HW Design
# Week7
# Routing Rules

**General routing guidelines**:

- Keep traces short and direct
- Avoid unnecessary vias
- Maintain consistent trace width
- Avoid sharp 90° corners (use 45° or arcs)
- Separate analog and digital routing
- Route clocks first

**Critical idea**:

- Every signal needs a **return path**

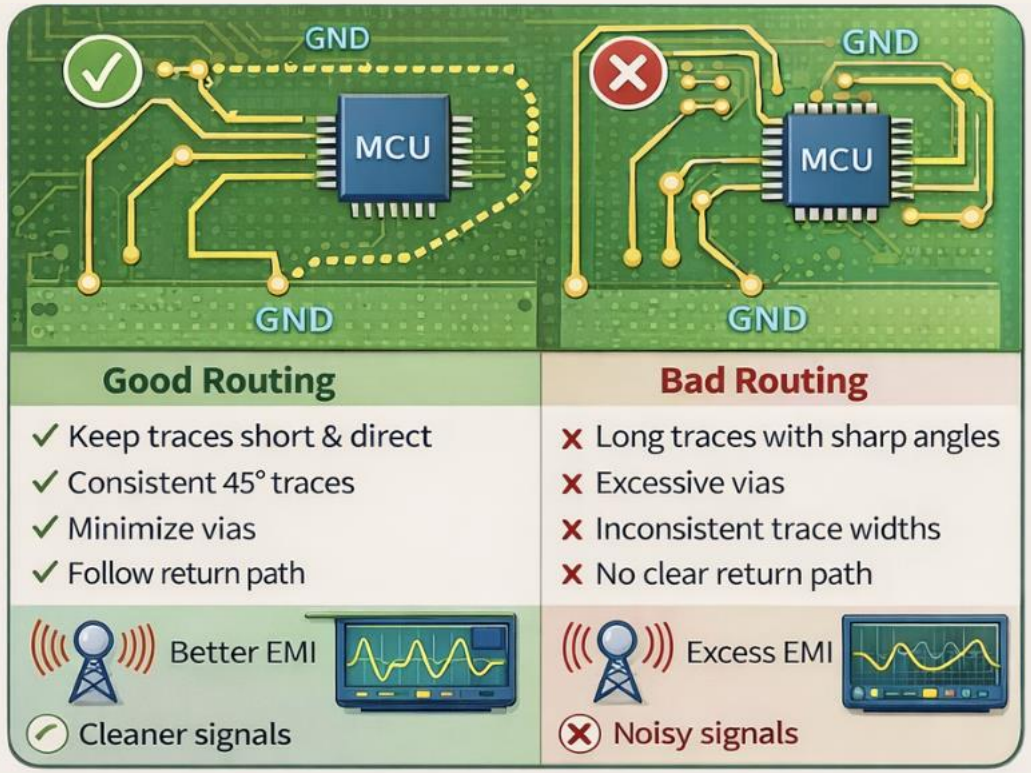


Template designed by Tim Palmer, tpalmer@vt.edu

# Embedded System HW Design
# Week7
# Differential & Sensitive Signals

**For USB, Ethernet, high-speed buses**:

- Route as differential pairs
- Match trace lengths
- Maintain controlled impedance
- Avoid plane splits under these signals

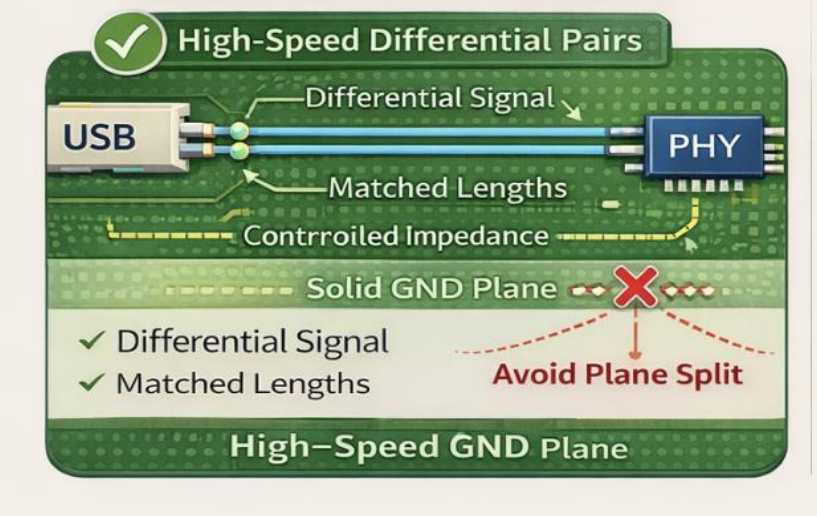


**For analog sensors**:

- Keep away from switching regulators
- Use guard traces if needed
- Reference to clean analog ground

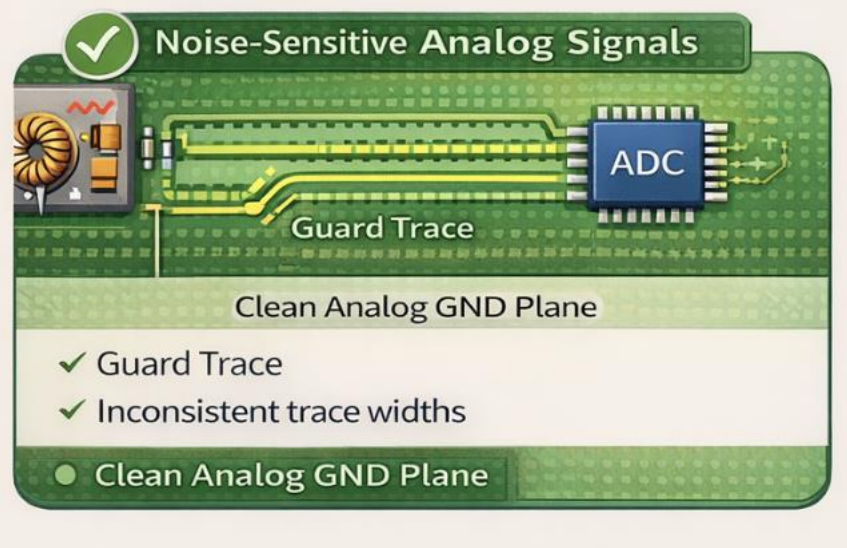


Template designed by Tim Palmer, tpalmer@vt.edu

# Embedded System HW Design
# Week7
# Decoupling Capacitors

**Decoupling caps**:

- Supply instantaneous current to MCU pins
- Reduce supply noise
- Stabilize voltage rails

**Without proper decoupling**:

- Random resets
- ADC noise
- Communication failures

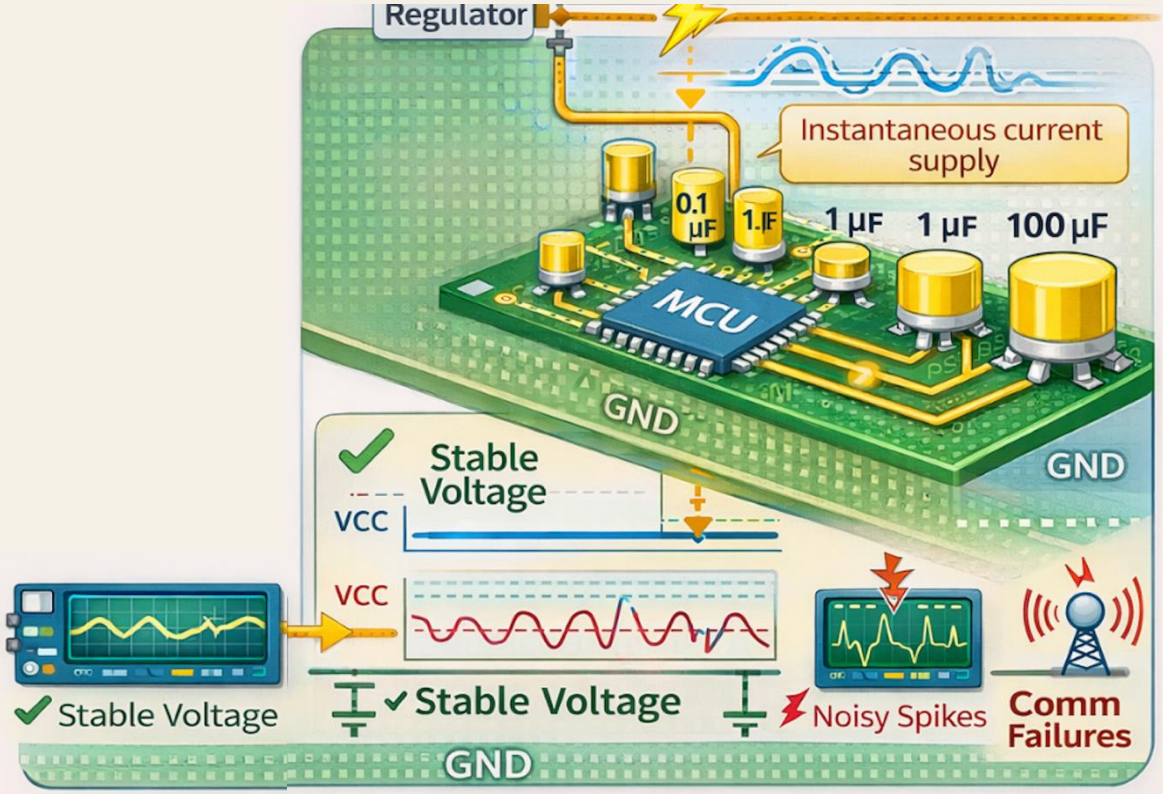

# Embedded System HW Design
# Week7
# Decoupling Best Practices

**For STM32 MCUs**:

- One 0.1 µF ceramic per VDD pin
- One bulk capacitor (4.7–10 µF) per rail

**Placement rules**:

- As close as physically possible to MCU pins
- Short, wide traces
- Direct via to ground plane

**Think**:

- Capacitor + pin + ground
  must form the *smallest loop possible*

Template designed by Tim Palmer, tpalmer@vt.edu

# Embedded System HW Design
# Week7
# Power Integrity Overview

**Power integrity means**:

- Delivering clean, stable voltage
- Under all operating conditions

**Challenges**:

- Fast MCU current transients
- Switching regulators
- Wireless radios (BLE/Wi-Fi)

**Symptoms of poor PI**:

- Brownouts
- Clock jitter
- Communication errors

Template designed by Tim Palmer, tpalmer@vsu.edu

# Embedded System HW Design
# Week7
# Grounding Techniques

**Golden rule**:

- One solid ground plane beats complex ground splits.

**Recommended**:

- Continuous ground plane
- Stitching vias around board edges
- Separate analog ground region only if required
- Single-point connection between analog and digital ground

**Avoid**:

- Long ground traces
- Narrow necks in ground planes

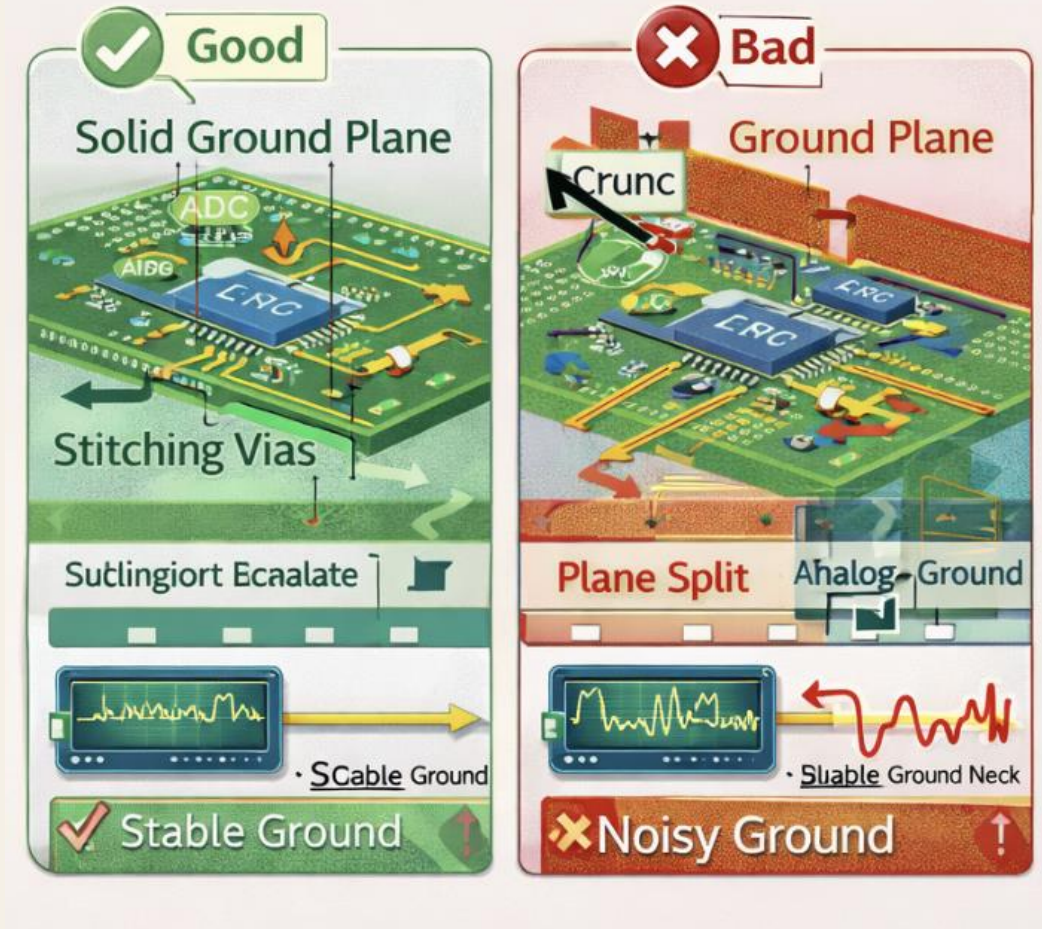

# Embedded System HW Design
# Week7
# Power Distribution Strategy

**Typical STM32 board**:

- Input power → regulator
- Regulator → MCU + peripherals
- Local decoupling at each device

**Best practices**:

- Wide power traces
- Star topology for sensitive rails
- Ferrite beads for analog supplies
- Dedicated filtering for sensors

Template designed by Tim Palmer, tpalmer@vt.edu

# Embedded System HW Design
# Week7
# High-Speed Design Consideration

**High-speed starts much lower than you think**:

- SPI > 10 MHz
- USB
- BLE radios
- Camera interfaces

**Issues**:

- Reflections
- Crosstalk
- EMI
- Layout matters more than schematic.

Template designed by Tim Palmer, tpalmer@vsu.edu

# Embedded System HW Design
# Week7
## High-Speed Layout Rules

- Controlled impedance traces
- Short clock routes
- Ground reference under every fast signal
- Avoid stubs
- Minimize vias on high-speed nets
- Keep RF sections isolated

**For radios**:

- Follow reference layout exactly.

Template designed by Tim Palmer tpalmer@vt.edu

# Embedded System HW Design
# Week7
# Using STM32 Eval Boards as Reference

**STM32 discovery boards demonstrate**:

- Proper stackup choices
- Decoupling placement
- RF layout
- Power sequencing
- Sensor routing

**Always**:

- Download schematic + PCB files
- Study component placement
- Copy critical layouts (especially RF)

Template designed by Tim Palmer, tpalmer@ucsd.edu

# Embedded System HW Design
# Week7
# PCB Design Foundations & Hardware Integration

- PCB stackups, routing rules, decoupling
- Power integrity and grounding techniques
- High-speed design considerations
- Understanding eval board PCBs using STM32 kit as reference

Template designed by Tim Palmer, tpalmer@vsu.edu